●Specifications

Pressure Range	See Model Selection
Power	See Model Selection
Output signal	See Model Selection
Accuracy(Non Linearity/ Hysteresis/Repeatbility)	±0.5%F.S.(@25℃)
Compensated temperature range	-40 to 120℃
Operating temperature range	-40 to 120℃
Storage temperature range	-40 to 120℃
Safe overload rating	200%F.S. 150%F.S.(only 100MPa)
Burst overload rating	500%F.S. 200%F.S.(only 100MPa)
Stability	±0.25%F.S./year
Total Error Band (includes the following) ① Non Linearity ② Hysteresis ③ Repeatbility ④ Temperature effect on zero balance ⑤ Temperature effect on span load	±1.0%F.S.(-20 to 85℃) ±1.5%F.S.(-40 to -20℃) ±3.0%F.S.(85 to 120℃)
Response time	<1.5ms
Mechanical shock	980m/s²(11msec or lower)
Vibration proof	196m/s²(10Hz～2kHz)
Protection rating	IP67 ※Using mating connectors
Diaphragm	17-4PH
Screw	17-4PH
Case	SUS304
Dielectric strength	
Withstand voltage	100V AC (1 minute between all terminals and case)
Sensor weight	1～5MPa,10～50MPa : 65g 100MPa : 85g ※Body
CE marking	EMC directive, Europe RoHS directive conformity product
Load Resistance	See Model Selection
Load Resistance	See Model Selection

●Model Selection

Model ① Analog output ② Calibration ③ Connection Screw ④

Selection			Check	Model	Specifications			
① Model				VMS				
② Analog output				I	Output type: 4～20 mA	Safe load resistance: 150Ω MAX(DC11V), 500Ω MAX(DC24V)	Consumption current: 5mA(MAX)	Power supply: 10～30VDC
				V	Output type: 1～5 V	Safe load resistance: 2kΩ or more		12～30VDC
	③ Calibration			001	0～1MPa			
				002	0～2MPa			
				005	0～5MPa			
				010	0～10MPa			
				020	0～20MPa			
				035	0～35MPa			
				050	0～50MPa			
				100	0～100MPa			
		④ Connection Screw		R2	R1/4 ※Selectable only when 001～050 of ③ are selected.			
				G3	G3/8 ※Selectable only when 100 of ③ is selected.			
Option	M12 connector cable		When Cable is needed, see for detailed cable drawings.					

●Cable wiring

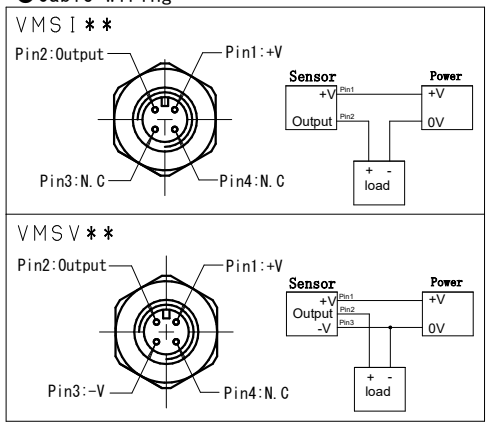

●External dimensions

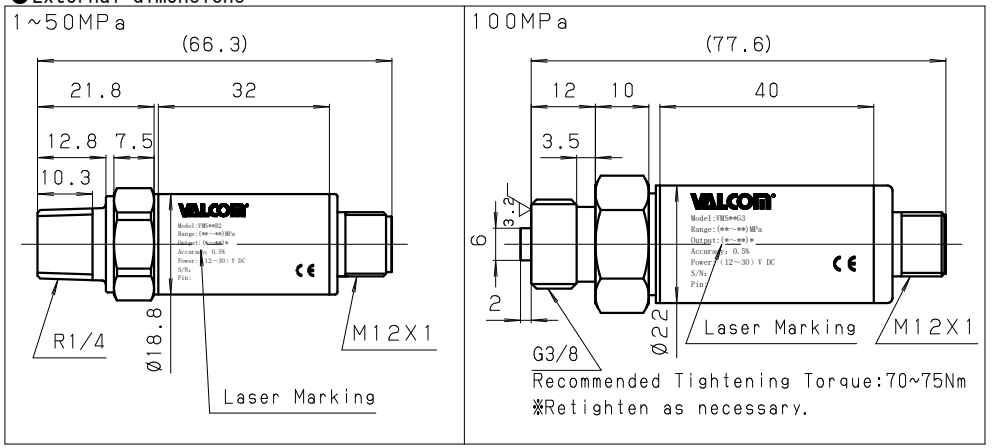

●M12 connector cable

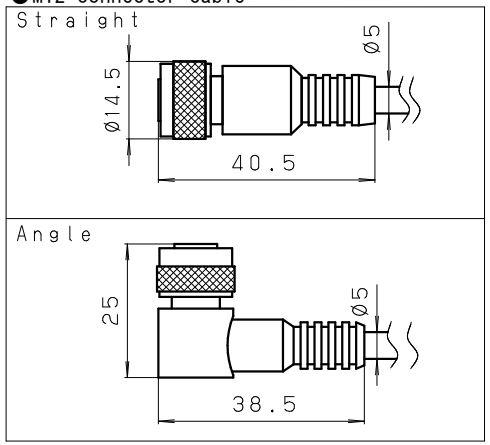

●Shape of Screw

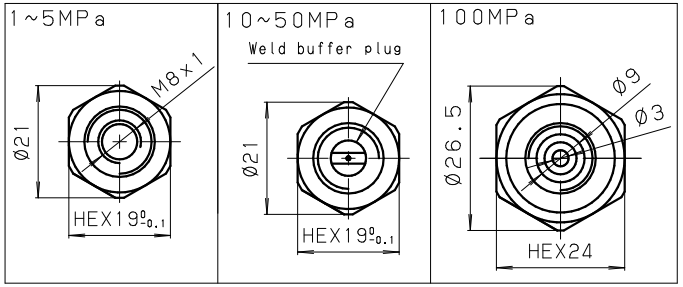

●Accessories (100MPa)

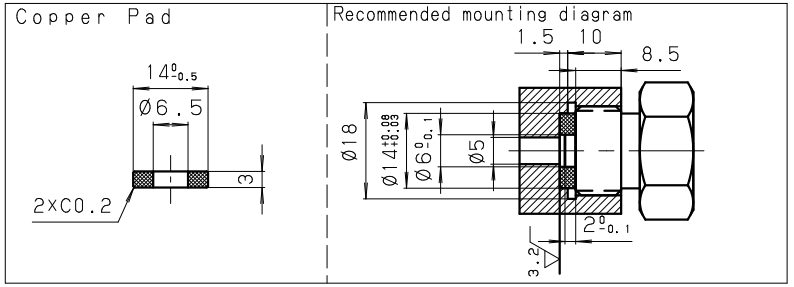

符号 REV.	改訂日 REV. DATE	改訂内容 REVISION	担当 ENG	検図 CHK	承認 APP	第三角法 THIRD ANGLE PROJECTION	単位 UNIT mm	品名 TITLE
						尺度 SCALE 1:1	シートサイズ SHEET SIZE A3	Pressure Transmitter
						作成日 DATE 2024.09.03		型式 MODEL VMS(*)(*)(*)
						製図 DRAWN Y.Y	設計 DESIGNER	検図 CHECKED R.M / 承認 APPROVED
								図面番号 DWG NO. A-M-3059-01-S0 / 改訂符号 REV

VALCOM 株式会社バルコム VALCOM CO., LTD

Reference drawing